ALVOLTA
BUILT FOR POWER



ALVOLTA 12/24V VOLTMETER SURFACE MOUNT SOCKET

ALV-VMSS

Key Features:

- Suits 12-24V Systems
- DC Voltage Reading
- LED Display
- Pre-Wired for Installation
- Durable Design

Suitable for:

1 YEAR WARRANTY

ALVOLTA
BUILT FOR POWER

ALVOLTA 12/24V VOLTMETER SURFACE MOUNT SOCKET

ALV-VMSS

Specifications:

Voltage Rating	5 - 48V
Contact Resistance	53mΩ
Insulation Resistance	100mΩ (500V DC)
Dielectric Strength	1500V AC 1 min
Electrical Life	10,000 Cycles
Mechanical Life	100,000 Cycles
Mounting Type	Surface Mount
Mounting Hole Size	4mm
Included Cable	UL 1015 cable, 4mm² diameter, 100mm length
Ingress Protection	IP67
Operating Temperature Range	-40°C - +85°C
Housing Material	PA6 (Polyamide/Nylon 6)
Colour	Black
Dimensions (w x h x d)	55 x 50 x 80mm
Warranty	1 Year

Model Diagram:

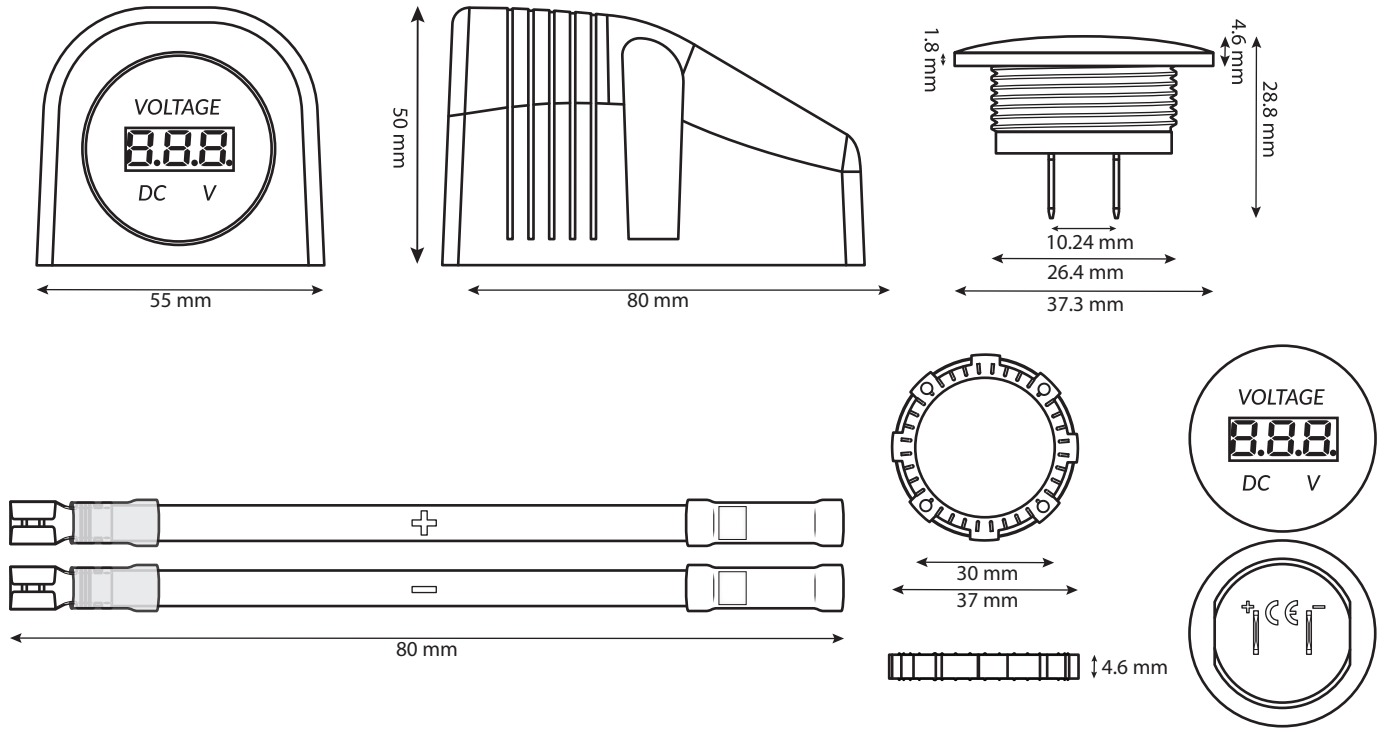

*All data and specifications provided in this datasheet are tested under standard test conditions, and may deviate marginally from actual values. Alvolta and its associates reserve the right to make modifications to the provided information without notice. Alvolta maintains the goal to supply customers with the most recent information regarding its products.