ALVOLTA
BUILT FOR POWER

Dual Circuit Plus 300A Mini Battery Switch

AS323002RP

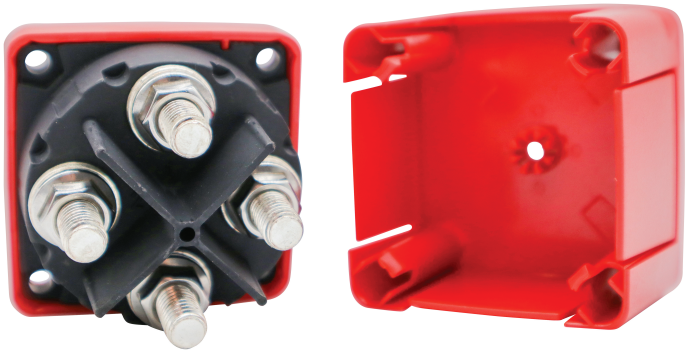

Features	
Switch Type	Dual Circuit Plus
Battery Inputs	2
Switch Positions	2
Battery Combine	Yes
Maximum Voltage	32V DC
Continuous Rating	300A
Intermittent Rating	450A
Cranking Rating	675A

Suitable for:

Product Properties	
Terminal Stud Size	M10 (3/8”-16)
Cable Size	4/0 AWG (120mm2)
Cable Clearance	28.4mm (1.12’)
Mounting Holes	#10 (M5) Screw
Terminal Stud Material	Tinned Copper
Terminal Stud Torque	120 in-lb (13.56N-m)
Colour	Red
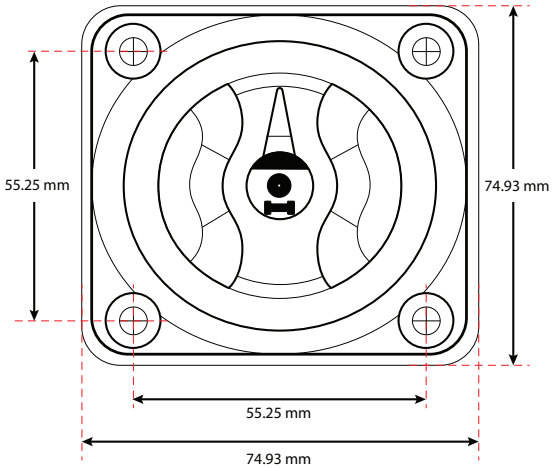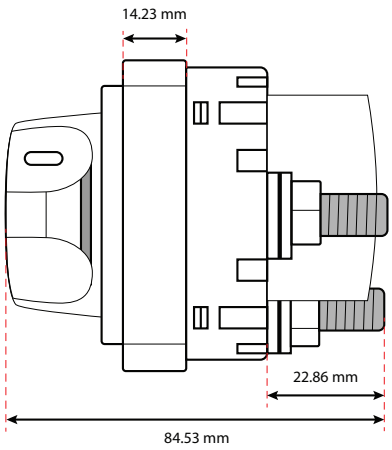
Product Dimensions