ALVOLTA
BUILT FOR POWER



ALVOLTA 12/24V POWER SURFACE MOUNT SOCKET

ALV-BPSS, ALV-WPSS

Key Features:

- Suits 12-24V Systems
- DC Power Socket
- IP65 Rated
- Pre-Wired for Installation
- Durable Design

Suitable for:

1 YEAR WARRANTY

ALVOLTA
BUILT FOR POWER

ALVOLTA 12/24V POWER SURFACE MOUNT SOCKET

ALV-BPSS, ALV-WPSS

Specifications:

Model	ALV-BPSS	ALV-WPSS
Colour	Black	White
Input Voltage	12 / 24V	
Current Rating	10A	
Output	120 - 240W	
Included Cable	UL 1015 cable, 4mm² diameter, 100mm length	
Mounting Type	Surface Mount	
Mounting Hole Size	4mm	
Housing Material	PA6 (Polyamide/Nylon 6)	
Ingress Protection	IP65	
Operating Temperature Range	-25°C - +85°C	
Dimensions (w x h x d)	55 x 49.5 x 81mm	
Warranty	1 Year	

Model Dimensions:

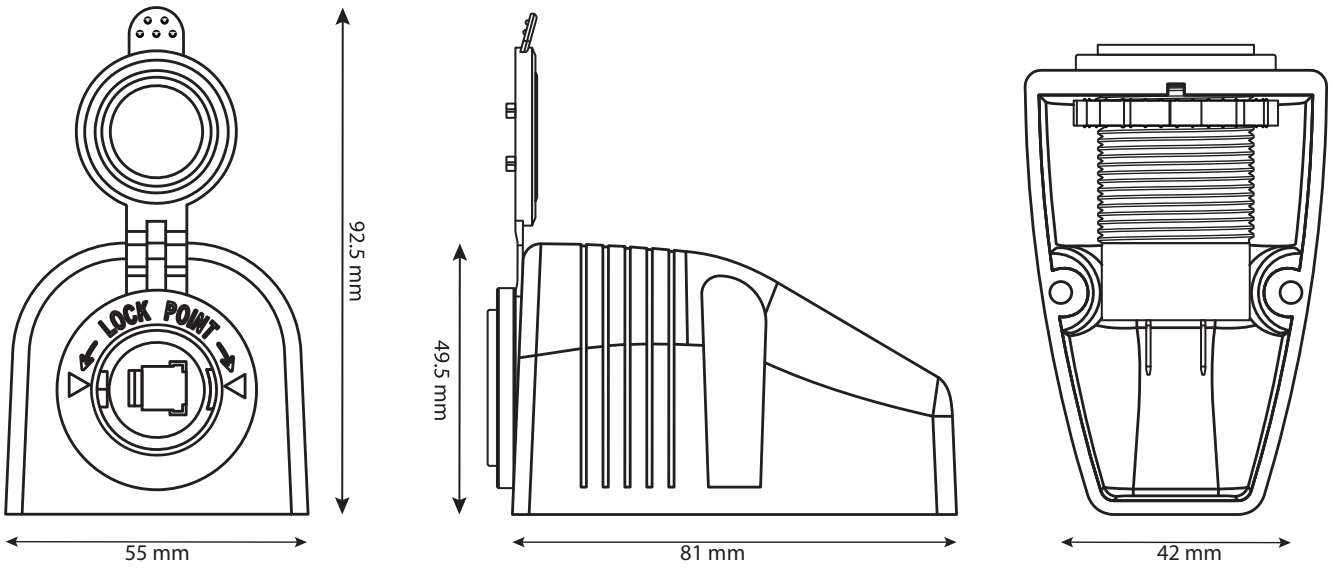

*All data and specifications provided in this datasheet are tested under standard test conditions, and may deviate marginally from actual values. Alvolta and its associates reserve the right to make modifications to the provided information without notice. Alvolta maintains the goal to supply customers with the most recent information regarding its products.

ALVOLTA 12/24V POWER SURFACE MOUNT SOCKET

ALV-BPSS, ALV-WPSS

Model Dimensions:

Power Plug Module

