ALVOLTA
BUILT FOR POWER



ALVOLTA DUO ANDERSON & POWER SURFACE MOUNT SOCKET

ALV-BSB50PSS

Key Features:

- QuickCharge Fast Charging
- Suits 12-24V Systems
- Compatible with Standard Smart Phones
- Pre-Wired for Installation
- Multiple Ports

Suitable for:

1 YEAR WARRANTY

ALVOLTA
BUILT FOR POWER

ALVOLTA DUO ANDERSON & POWER SURFACE MOUNT SOCKET

ALV-BSB50PSS

Specifications:

Input Voltage	12 / 24V
Power Plug Current Rating	10A
Power Plug Output	120 - 240W
Anderson Current Rating	50A
Included Cable	UL 1015 cable, 4mm² diameter, 100mm length
Mounting Type	Surface Mount
Mounting Hole Size	4mm
Anderson Plug Material	Flame Retardant PVC
Housing Material	PA6 (Polyamide/Nylon 6)
Ingress Protection	IP65
Operating Temperature Range	-25°C - +85°C
Colour	Black
Dimensions (w x h x d)	120 x 53.2 x 86.4mm
Warranty	1 Year

Model Diagram:

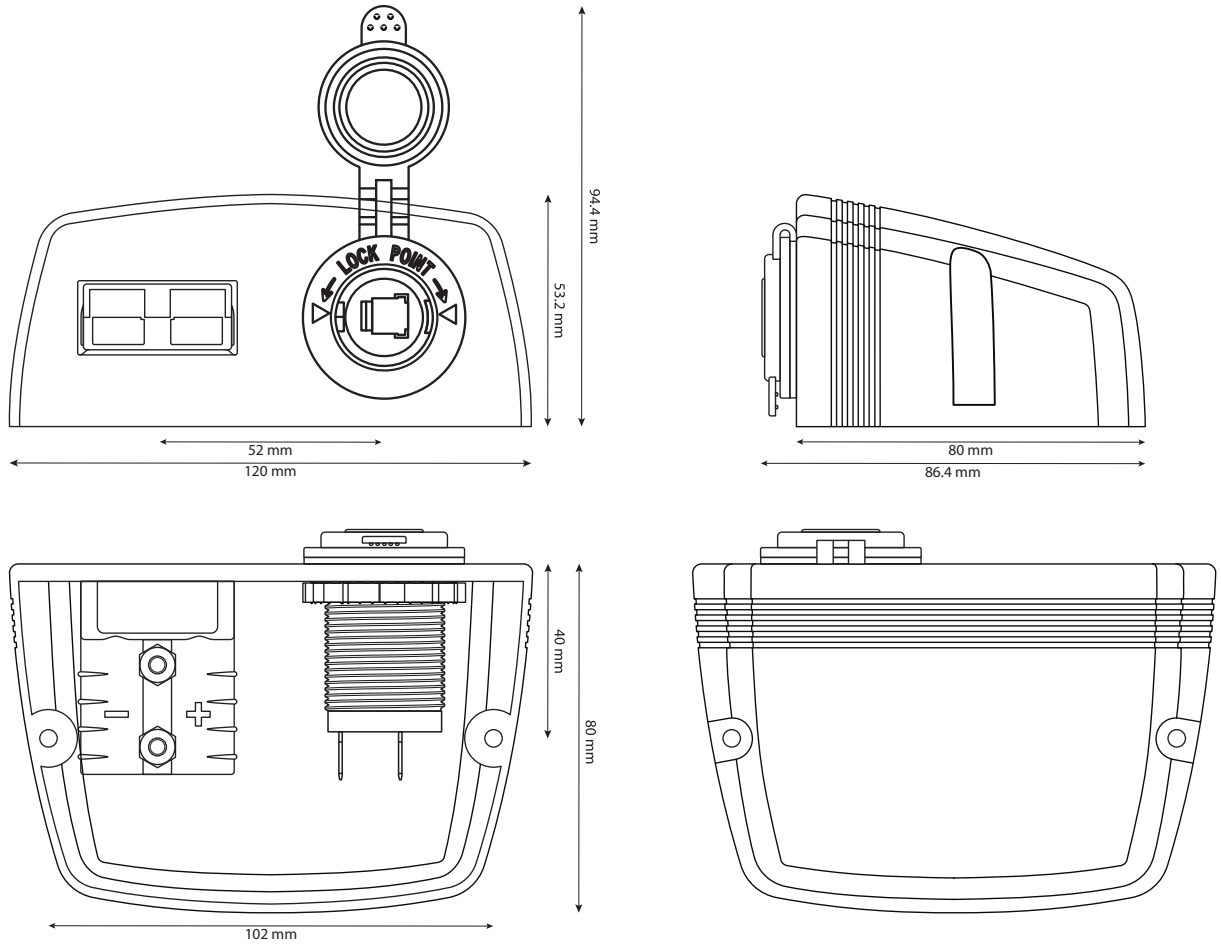

ALVOLTA DUO ANDERSON & POWER SURFACE MOUNT SOCKET

ALV-BSB50PSS

Model Diagram:

Power Plug Module

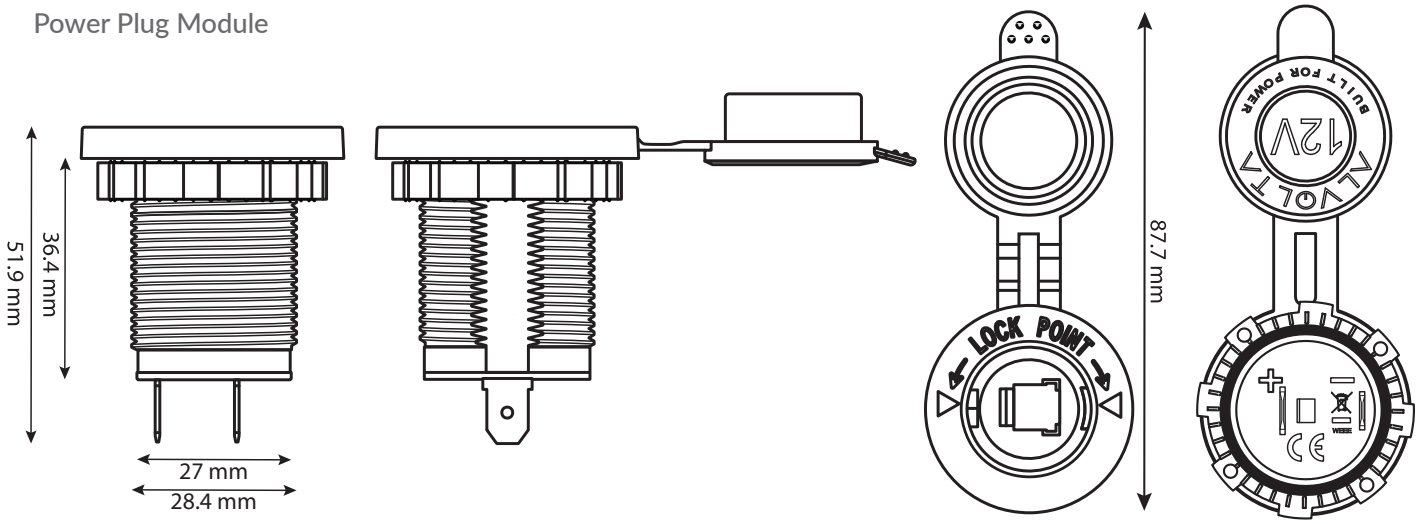

Anderson Plug Module

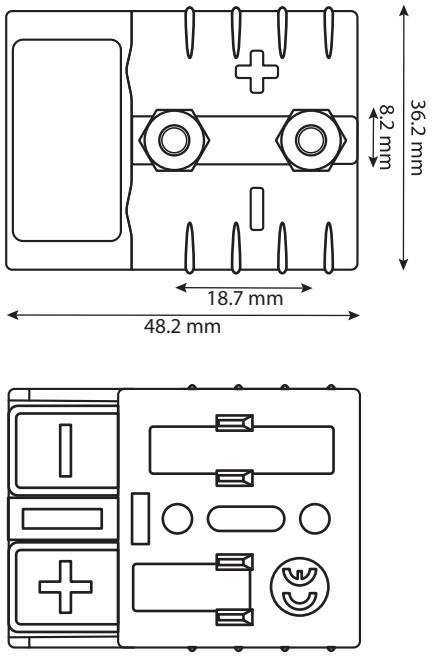

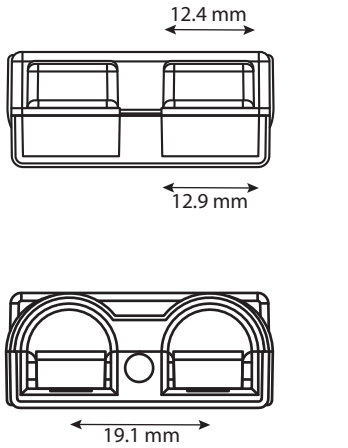

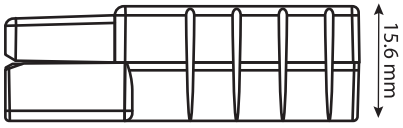

Anderson Contacts

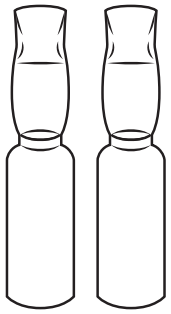

*All data and specifications provided in this datasheet are tested under standard test conditions, and may deviate marginally from actual values. Alvolta and its associates reserve the right to make modifications to the provided information without notice. Alvolta maintains the goal to supply customers with the most recent information regarding its products.