ALVOLTA
BUILT FOR POWER



ALVOLTA DUO POWER & USB A+C FLUSH MOUNT SOCKET

ALV-BPCAFS, ALV-WPCAFS

Key Features:

- QuickCharge Fast Charging
- Suits 12-24V Systems
- Compatible with Standard Smart Phones
- Pre-Wired for Installation
- Multiple Charging Ports

Suitable for:

1 YEAR WARRANTY

ALVOLTA
BUILT FOR POWER

ALVOLTA DUO POWER & USB A+C FLUSH MOUNT SOCKET

ALV-BPCAFS, ALV-WPCAFS

Specifications:

Model	ALV-BPCAFS	ALV-WPCAFS
Colour	Black	White
Input Voltage	12 / 24V	
Combined USB Output	118W	
USB-C Output	5V / 3A, 9V / 3A, 12V / 3A, 15V / 3A, 20V / 5A	
USB-A Output	5V / 3A, 9V / 2A, 12V / 1.5A	
USB Impedance	< 100mΩ	
Power Plug Current Rating	10A	
Power Plug Output	120 - 240W	
Included Cables	2x UL 1015 cable, 4mm² diameter, 100mm length	
Mounting Type	Flush Mount	
Mounting Hole Size	4mm	
Housing Material	PA6 (Polyamide/Nylon 6)	
Ingress Protection	IP65	
Operating Temperature Range	-25°C - +85°C	
Colour	Black	
Dimensions (w x h x d)	106 x 43 x 60.2mm	
Warranty	1 Year	

Model Dimensions:

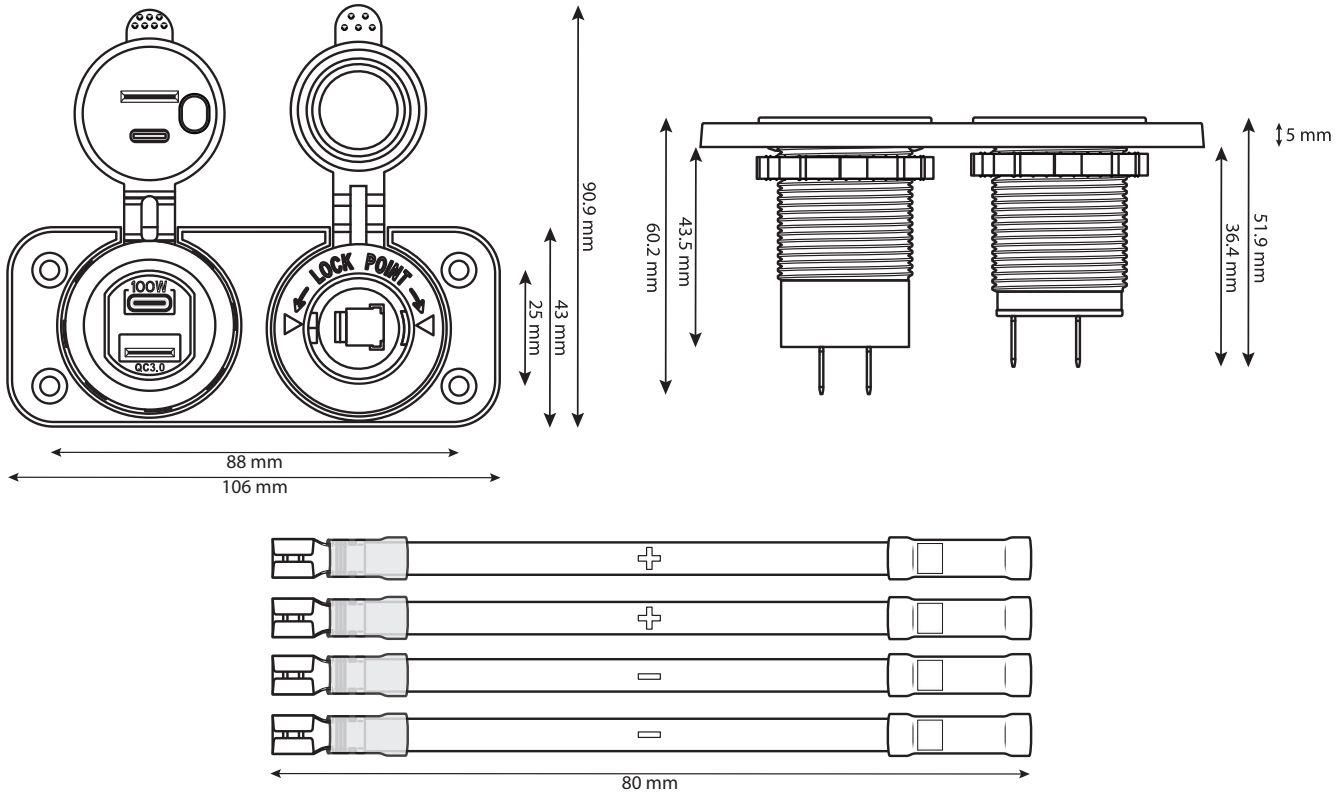

ALVOLTA
BUILT FOR POWER

ALVOLTA DUO POWER & USB A+C FLUSH MOUNT SOCKET

ALV-BPCAFS, ALV-WPCAFS

Model Dimensions:

USB Module

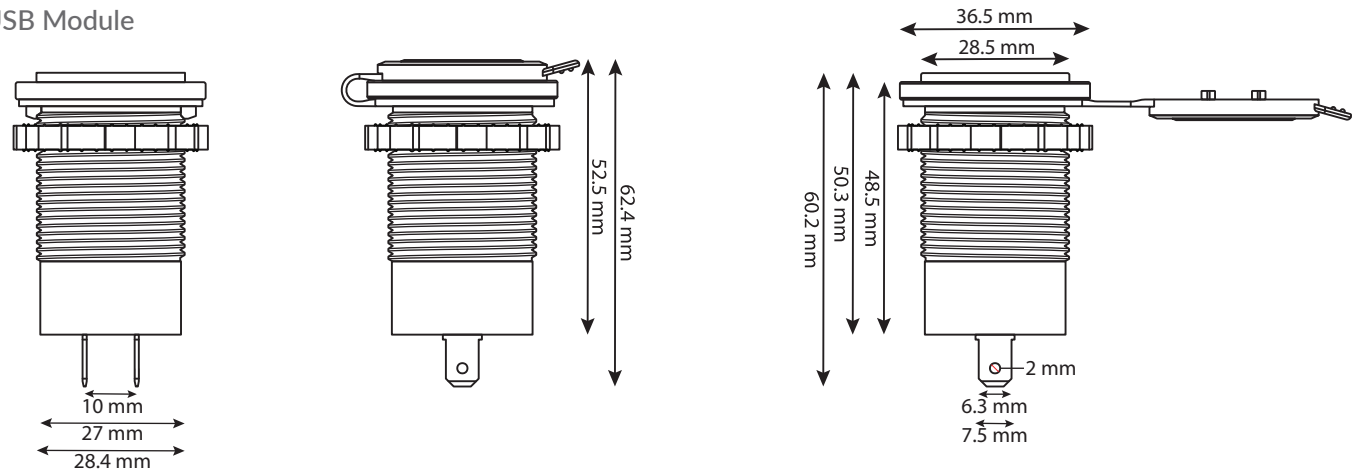

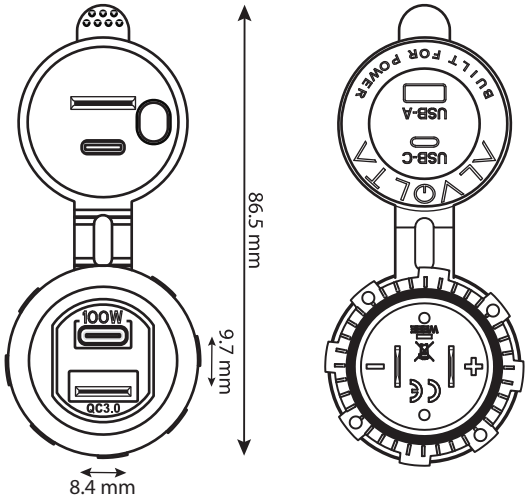

Power Plug Module

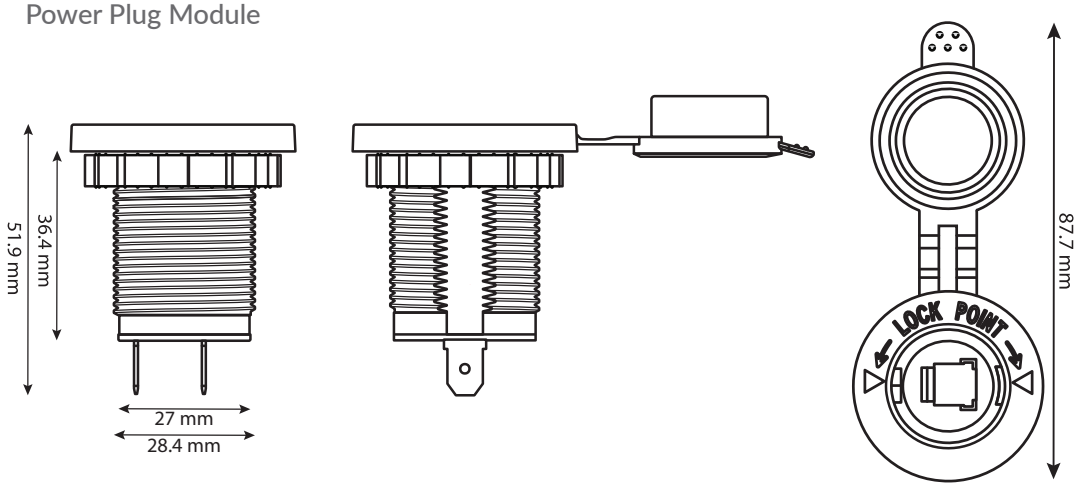

*All data and specifications provided in this datasheet are tested under standard test conditions, and may deviate marginally from actual values. Alvolta and its associates reserve the right to make modifications to the provided information without notice. Alvolta maintains the goal to supply customers with the most recent information regarding its products.