ALVOLTA
BUILT FOR POWER




# ALVOLTA DUO POWER & USB A+C FLUSH MOUNT SOCKET

## ALV-BPCAFS, ALV-WPCAFS

### Key Features:

- QuickCharge Fast Charging
- Suits 12-24V Systems
- Compatible with Standard Smart Phones
- Pre-Wired for Installation
- Multiple Charging Ports

### Suitable for:

1 YEAR WARRANTY

ALVOLTA
BUILT FOR POWER

# ALVOLTA DUO POWER & USB A+C FLUSH MOUNT SOCKET

## ALV-BPCAFS, ALV-WPCAFS

## Specifications:

| Model | ALV-BPCAFS | ALV-WPCAFS |
|---|---|---|
| Colour | Black | White |
| Input Voltage | 12 / 24V | |
| Combined USB Output | 118W | |
| USB-C Output | 5V / 3A, 9V / 3A, 12V / 3A, 15V / 3A, 20V / 5A | |
| USB-A Output | 5V / 3A, 9V / 2A, 12V / 1.5A | |
| USB Impedance | < 100mΩ | |
| Power Plug Current Rating | 10A | |
| Power Plug Output | 120 - 240W | |
| Included Cables | 2x UL 1015 cable, 4mm² diameter, 100mm length | |
| Mounting Type | Flush Mount | |
| Mounting Hole Size | 4mm | |
| Housing Material | PA6 (Polyamide/Nylon 6) | |
| Ingress Protection | IP65 | |
| Operating Temperature Range | -25°C - +85°C | |
| Colour | Black | |
| Dimensions (w x h x d) | 106 x 43 x 60.2mm | |
| Warranty | 1 Year | |

## Model Dimensions:

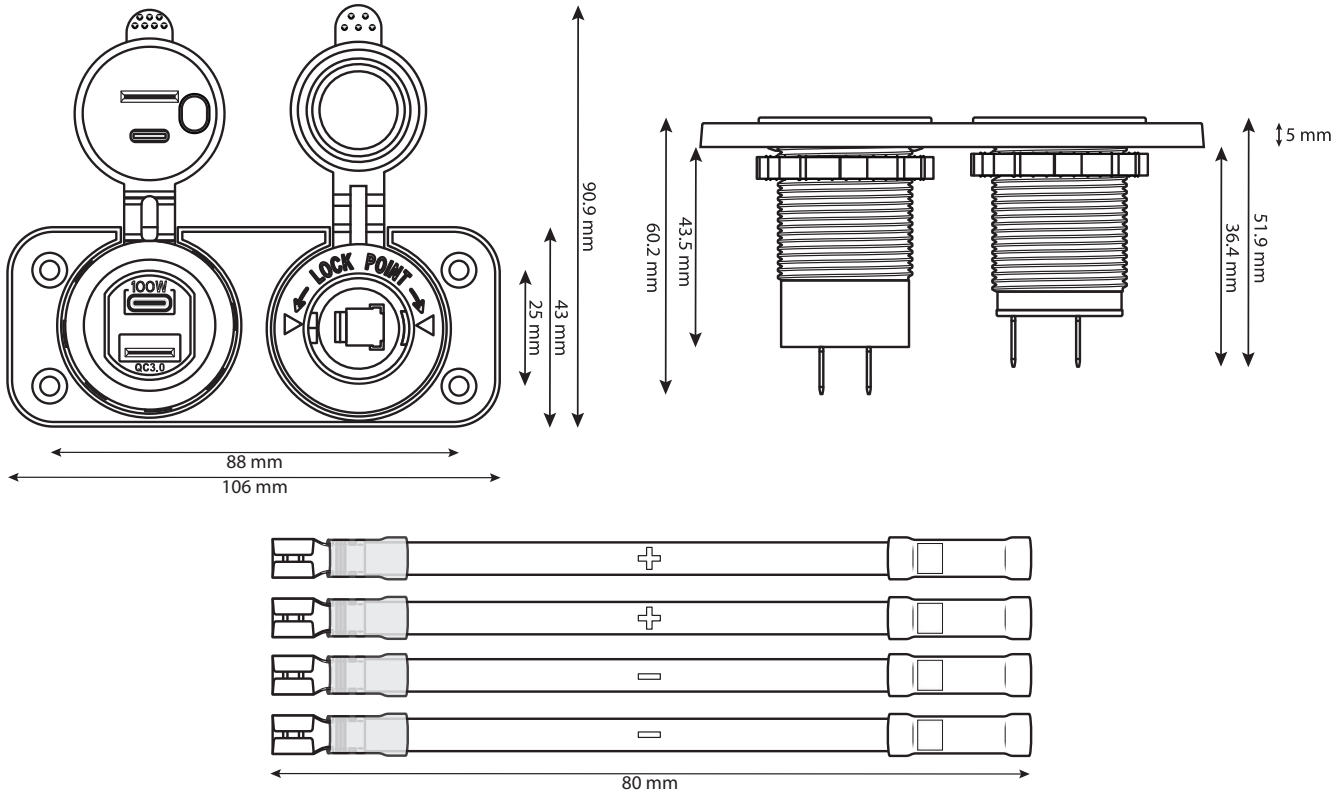

ALVOLTA
BUILT FOR POWER

# ALVOLTA DUO POWER & USB A+C FLUSH MOUNT SOCKET

## ALV-BPCAFS, ALV-WPCAFS

## Model Dimensions:

### USB Module

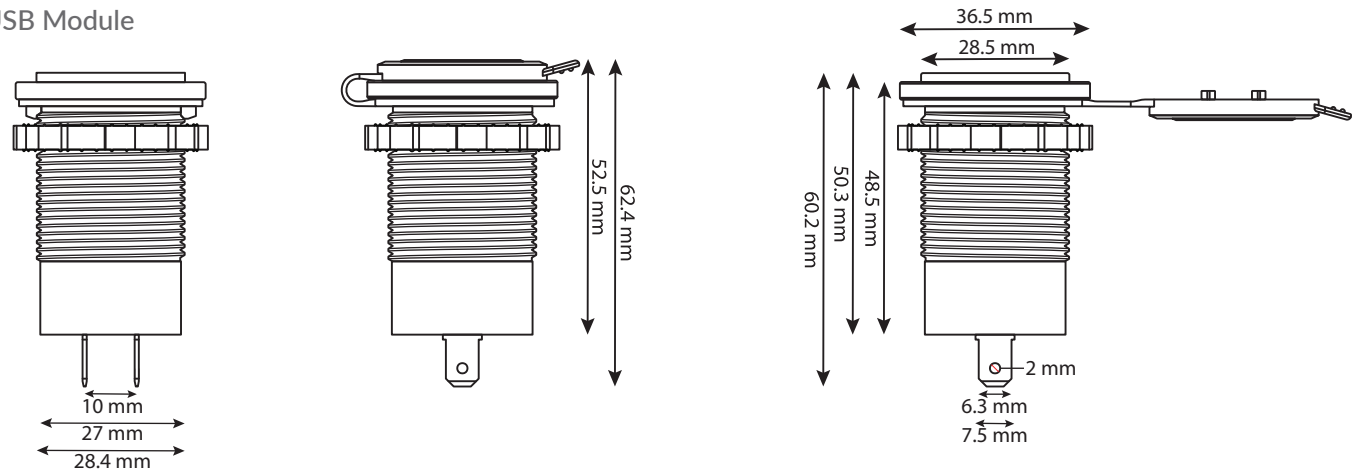


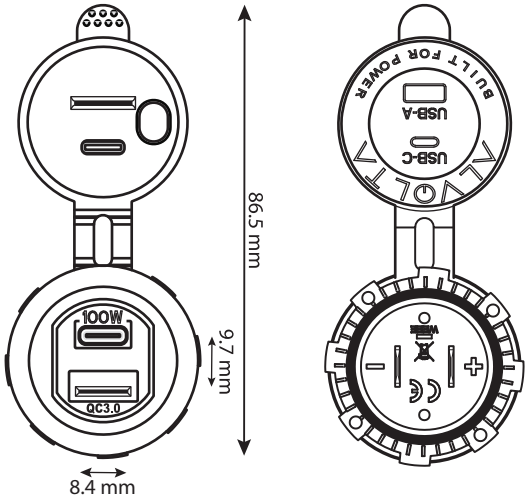


### Power Plug Module

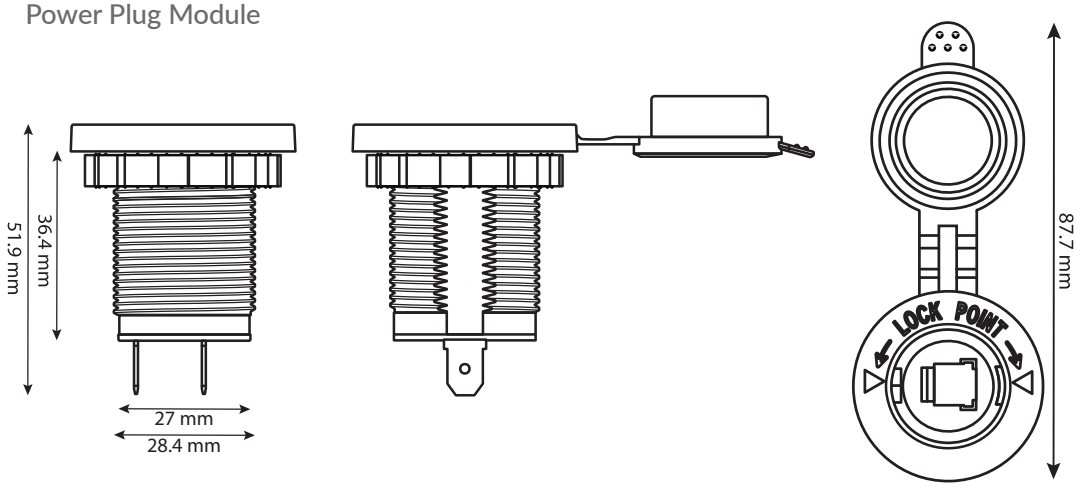


*All data and specifications provided in this datasheet are tested under standard test conditions, and may deviate marginally from actual values. Alvolta and its associates reserve the right to make modifications to the provided information without notice. Alvolta maintains the goal to supply customers with the most recent information regarding its products.