ALVOLTA
BUILT FOR POWER



ALVOLTA 50A ANDERSON SURFACE MOUNT SOCKET

ALV-SB50SS

Key Features:

- Suits 12-24V Systems
- 50A Anderson Plug
- IP65 Rated
- Pre-Wired for Installation
- Durable Design

Suitable for:

1 YEAR WARRANTY

ALVOLTA
BUILT FOR POWER

ALVOLTA 50A ANDERSON SURFACE MOUNT SOCKET

ALV-SB50SS

Specifications:

Input Voltage	12 / 24V
Current Rating	50A
Mounting Type	Surface Mount
Mounting Hole Size	4mm
Anderson Plug Material	Flame Retardant PVC
Housing Material	PA6 (Polyamide/Nylon 6)
Ingress Protection	IP65
Operating Temperature Range	-25°C - +85°C
Colour	Black
Dimensions (w x h x d)	62 x 34.4 x 83.8mm
Warranty	1 Year

Model Diagram:

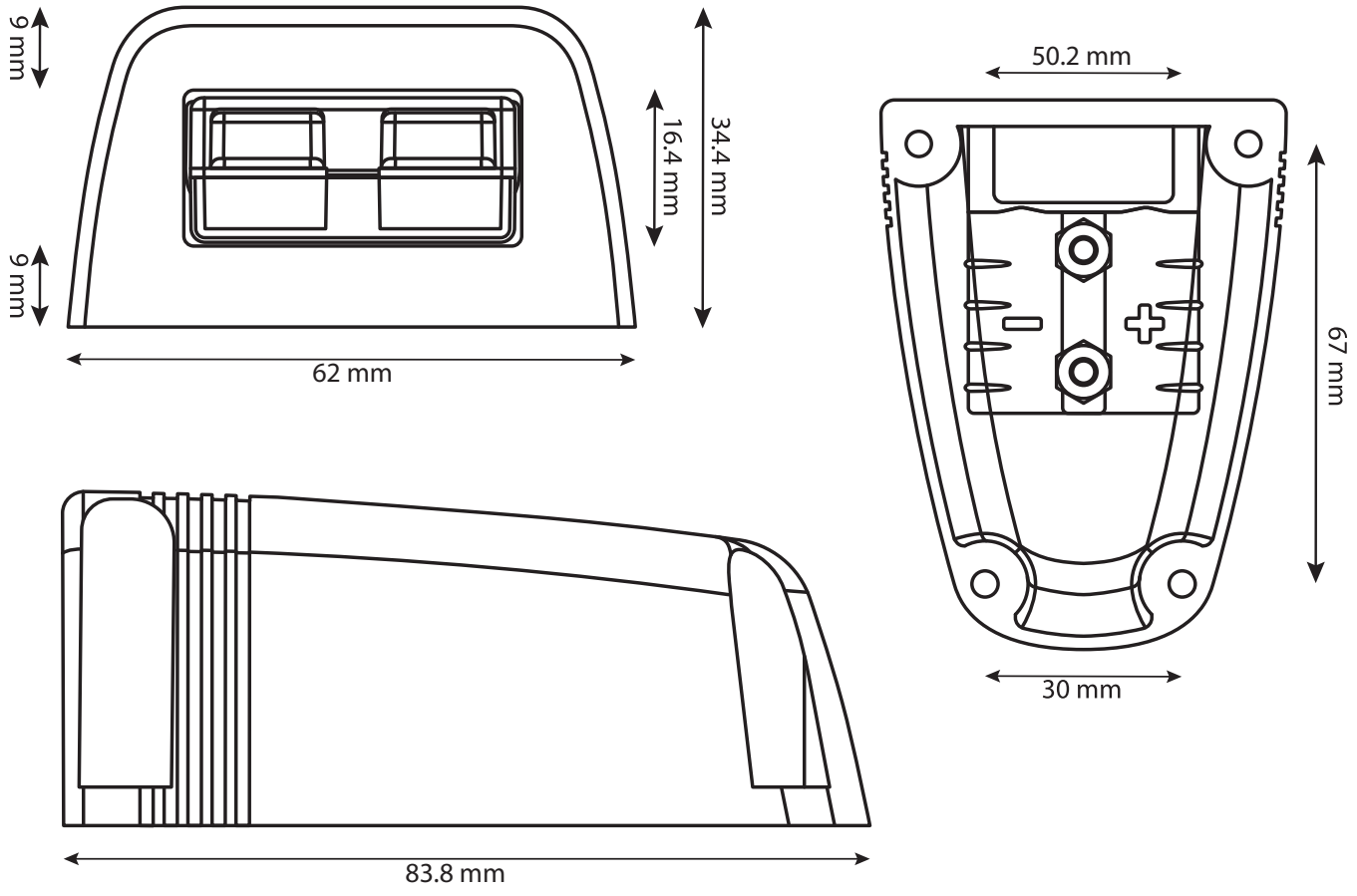

ALVOLTA 50A ANDERSON SURFACE MOUNT SOCKET

ALV-SB50SS

Model Diagram:

Anderson Plug Module

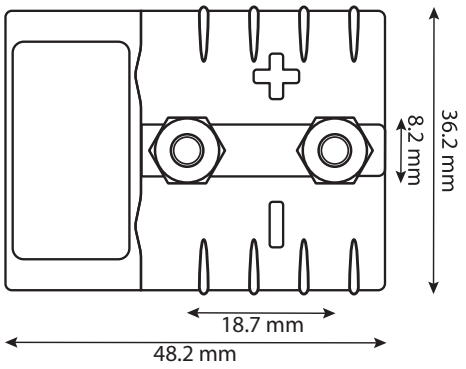

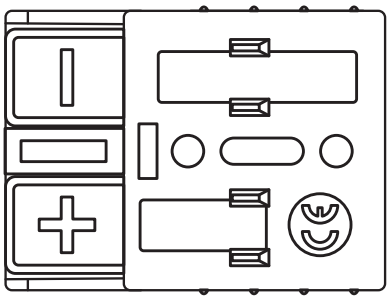

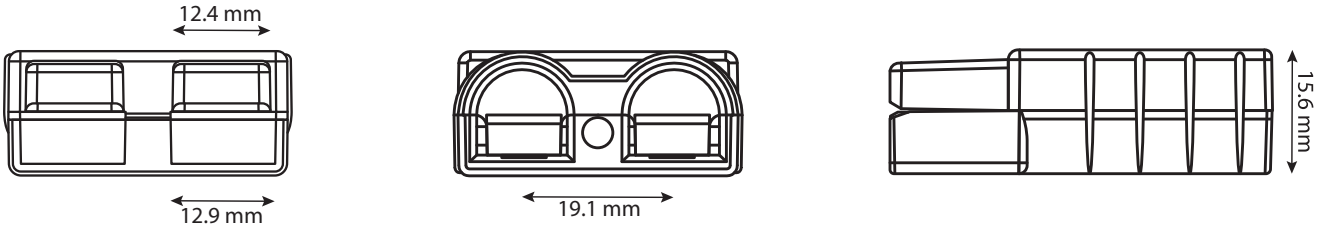

Anderson Contacts

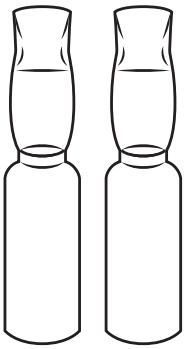

*All data and specifications provided in this datasheet are tested under standard test conditions, and may deviate marginally from actual values. Alvolta and its associates reserve the right to make modifications to the provided information without notice. Alvolta maintains the goal to supply customers with the most recent information regarding its products.