ALVOLTA
BUILT FOR POWER



ALVOLTA ECLIPSE 12V 20W SOLAR PANEL

ALV-020SP

Key Features:

- Up to 20.6% module efficiency
- Weatherproof, IP65 sealed junction box
- Low voltage-temperature coefficient
- Sturdy, andonized aluminium frame
- Pre-wired 900mm cable with MC4 connectors

Suitable for:

5 YEAR PANEL WARRANTY

ALVOLTA
BUILT FOR POWER

ALVOLTA ECLIPSE 12V 20W SOLAR PANEL

ALV-020SP

Specifications:

Electrical	
Maximum Power (Pmax)	20W
Optimum Operating Voltage (Vmp)	19.4V
Optimum Operating Current (Imp)	1.04A
Open Circuit Voltage (Voc)	22.9V
Short Circuit Current (Isc)	1.09A
Module Efficiency	20.6%
Maximum System Voltage	600V DC
Power Tolerance	±3%
Thermal	
Operating Temperature Range	-40°C to +85°C
Temperature Coefficient (Pmax)	-0.43%/°C
Temperature Coefficient (Voc)	-0.34%/°C
Temperature Coefficient (Isc)	-0.05%/°C
Mechanical	
Solar Cells	Monocrystalline 156mm Cells
No. of Cells	36 (2 x 18)
Frame	Anodized Aluminium
Junction Box	IP65 Rated
Connectors	MC4 Style
Output Cables	2.5mm², 500mm
Dimensions (w x h x d)	430 x 345 x 35mm
Weight	1.92kg
Warranty	5 Years

RoHS 2011/ 65/ EU and amending directive (EU)2015/863

CE EN IEC 62368-1:2020+A11:2020

*All data and specifications provided in this datasheet are tested under standard test conditions, and may deviate marginally from actual values. Alvolta and it's associates reserve the right to make modifications to the provided information without notice. Alvolta maintains the goal to supply customers with the most recent information regarding its products.

ALVOLTA
BUILT FOR POWER

ALVOLTA ECLIPSE 12V 20W SOLAR PANEL

ALV-020SP

Module Diagram:

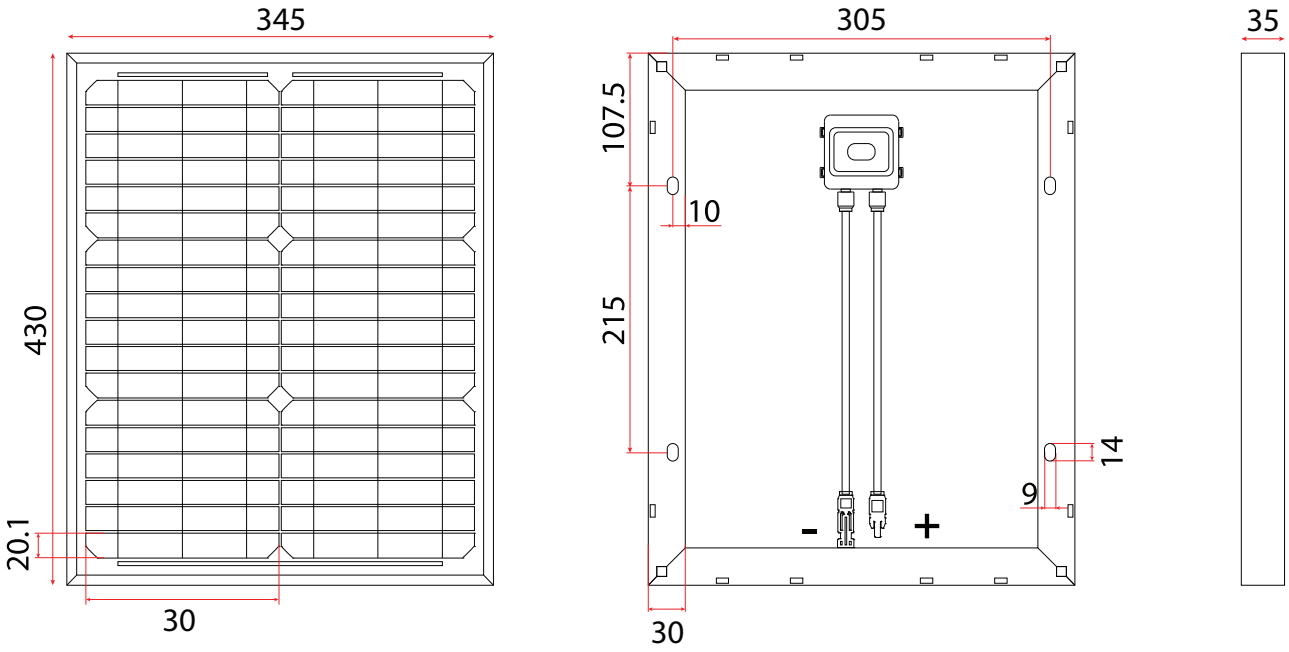

IV-Curve:

